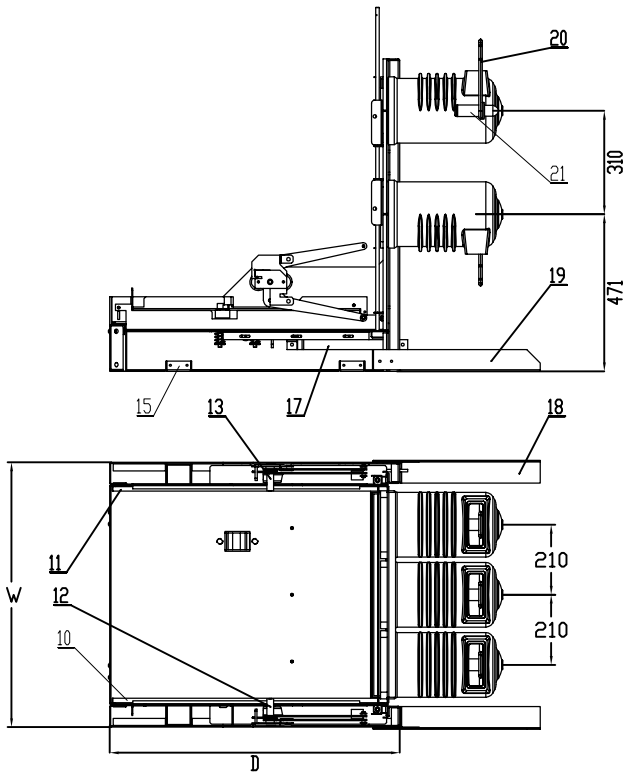

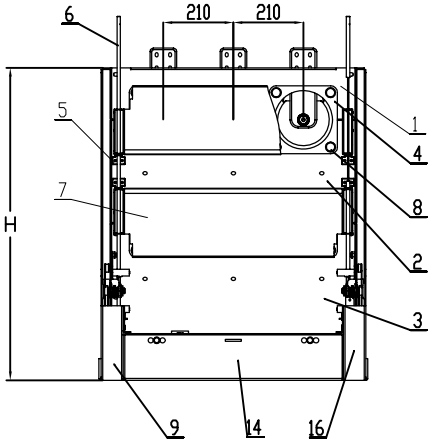

Caution: remove suprot part 18, 19 before cradle in use

SecoVac	Phase-to- phase distance (mm)	Depth(D)	Height(H)	Width(W)
630A ...25KA	210	870	937	794
1250A ...25KA	210	870	937	794
630A ...25KA	275	870	937	994
1250A ...25KA	275	870	937	994
1600A ...31.5KA	275	870	937	994
2000A ...31.5KA	275	870	937	994
2500A ...31.5KA	275	870	937	994

	part number	description	quantity		part number	description	quantity
21	SEV8100150P0101	stationary contact	6	11	SEV8120016R0102	right rail	1
20	SEV8120098P0102	busbar	6	10	SEV8120016R0101	left rail	1
19	SEV8120154P0102	right crutch	1	9	SEV8120153P0101	left frame	1
18	SEV8120154P0101	left crutch	1	8	SEV8120064P0101	spout cover	24
17	SEV8120115P0101	earthing bar	1	7	SEV8120036P0101	shutter	2
16	SEV8120153P0102	right frame	1	6	SEV8120037P0101	shutter rail	2
15	SEV8120153P0103	reinfored part	2	5	SEV8120038P0101	shutter rack	6
14	SEV8120020R0114	clapboard fitting	1	4	SEV8120005R0101	spout1250A	6
13	SEV8120011R0101	left side for operating the segregation shutters	1	3	SEV8120009P0125	installation plate3	1
12	SEV8120008R0101	right side for operating the segregation shutters	1	2	SEV8120009P0102	installation plate2	1
				1	SEV8120009P0101	installation plate1	1

GE Consumer & Industrial

GE Pacific Pte Ltd

240 Tanjong Pagar Road #06-00 GE Tower
Singapore 088540

TEL: +65 6326 3379
FAX: +65 6326 3015
WEB: www.ge.com

STAMP:

REV	DATE	SUBJECT	APPROVAL	DATE
3				
2				
1				
0				

FUNCTION	NAME	SIGNATURE
DRAWN		
DESIGNED		
CHECKED		
DISCIPLINE LEAD		
APPROVED		

CLIENT:

PROJECT:

TITLE

DWG NO.

SCALE | SHT NO.